Valve Regulated Lead Acid Battery

WPL26-12

Specifications

Nominal Voltage(V)

12V

Nominal Capacity

20 hour rate	(1.3A	to	10.50V)	26Ah
10 hour rate	(2.47A	to	10.50V)	24.7Ah
5 hour rate	(4.42A	to	10.20V)	22.1Ah
1C	(26A	to	9.60V)	16.47Ah
3C	(78A	to	9.60V)	10.4Ah

Weight

Approx. 8.5kg(18.7Lbs.)

Internal Resistance (at 1KHz)

Approx. 7 mΩ

Maximum Discharge Current for

5 seconds:390A

Charging Methods at 25℃(77℉)

Maximum Charging Current：	7.8A
Standby use:	
Float Charging Voltage	13.5 to 13.8V
Coefficient -3.0mV/℃/cell	

Operating Temperature Range

Charge	-15℃(5℉)	to	40℃(104℉)
Discharge	-15℃(5℉)	to	50℃(122℉)
Storage	-15℃(5℉)	to	40℃(104℉)

Charge Retention (shelf life) at 20℃(68℉)

1 month	97%
3 month	92%
6 month	85%

Case Material

ABS UL94 HB
Option: Flammability resistance of (UL94 V-0)

Design Life & Standard

EUROBAT (20℃):10/12 YEARS LONG LIFE

Terminal

F3

Dimensions

Length (L)	$166^{+2}_{-1}(6.54^{+0.08}_{-0.04})$
Width (W)	$175^{+2}_{-1}(6.89^{+0.08}_{-0.04})$
Height (H)	$125^{+2}_{-1}(4.92^{+0.08}_{-0.04})$
Overall Height (HT)	$125^{+2}_{-1}(4.92^{+0.08}_{-0.04})$

mm(inch)

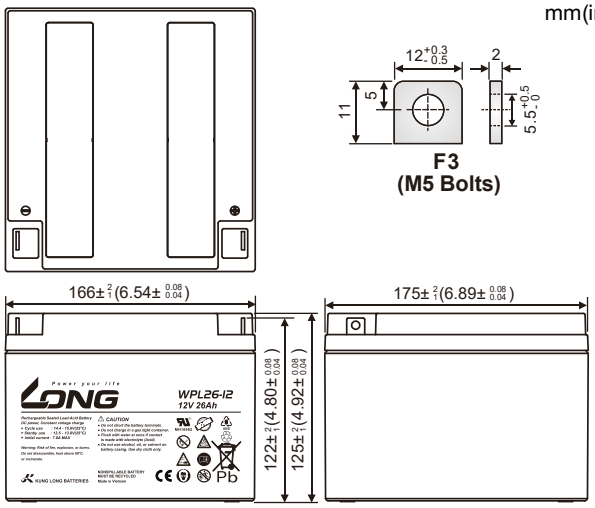

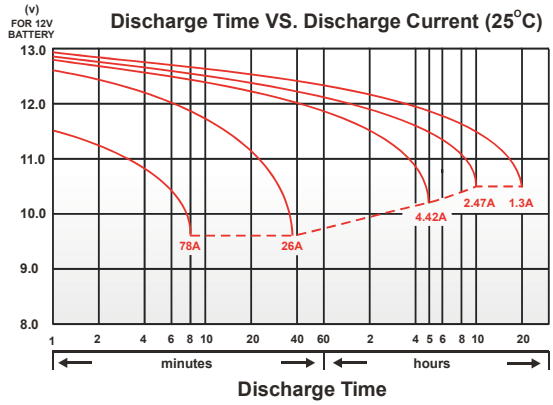

Effect of Temperature on Capacity 25℃(77℉)

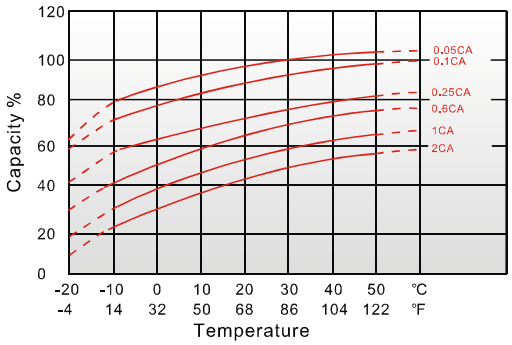

Capacity Retention Characteristic

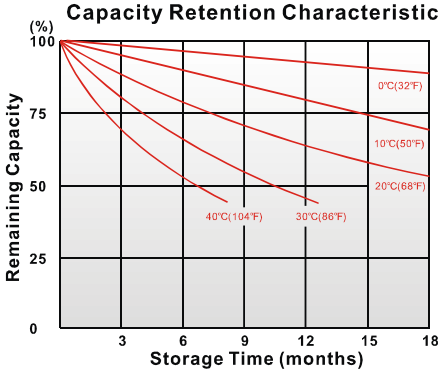

Influence of Temperature on Trickle(Float) Design Lif

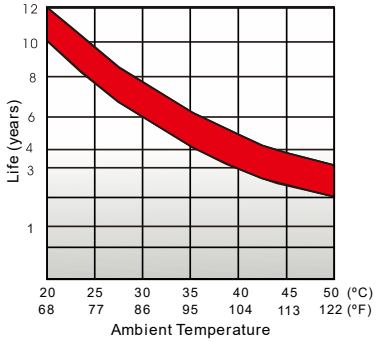

- PERFORMANCE DATA

Discharge Rates in Watts to Various End Voltages at 25℃(77℉)

Time \ End Voltage		1.85V	1.80V	1.75V	1.70V	1.67V	1.65V	1.60V
5	min	147	161	173	185	191	196	208
10	min	108	114	119	125	128	131	135
15	min	78.7	84.0	88.2	92.2	94.2	96.0	99.5
30	min	42.3	45.3	47.2	48.7	49.5	50.3	51.3
60	min	30.2	31.7	32.4	32.8	33.2	33.5	33.8
120	min	19.2	19.8	20.2	20.7	20.8	21.0	21.2
180	min	12.8	13.2	13.4	13.6	13.6	13.7	13.8
240	min	10.3	10.5	10.7	10.8	10.9	10.9	11.0
300	min	8.75	8.90	8.98	9.07	9.10	9.15	9.37
600	min	5.42	5.52	5.58	5.66	5.68	5.72	5.75
1200	min	2.62	2.69	2.74	2.78	2.80	2.82	2.83

- Discharge Rates in Amperes to Various End Voltages at 25℃(77℉)

Time \ End Voltage		1.85V	1.80V	1.75V	1.70V	1.67V	1.65V	1.60V
5	min	78.9	92.9	103	109	111	113	115
10	min	55.6	62.1	64.2	68.2	70.4	72.3	75.7
15	min	40.8	46.4	49.8	52.6	54.3	54.9	56.2
30	min	21.4	23.8	25.2	26.5	27.2	27.8	28.8
60	min	15.3	16.1	16.5	16.9	17.1	17.3	17.5
120	min	9.34	9.72	9.87	10.0	10.1	10.2	10.3
180	min	6.45	6.63	6.72	6.83	6.87	6.92	6.99
240	min	5.48	5.61	5.69	5.76	5.79	5.84	5.91
300	min	4.77	4.86	4.93	5.00	5.02	5.05	5.08
600	min	2.55	2.61	2.65	2.69	2.71	2.74	2.77
1200	min	1.29	1.34	1.36	1.38	1.39	1.40	1.43

All data on the spec. sheet is an average value:
The tolerance range : X<6min(+15%~-15%), 6min≦X<10min(+12%~-12%),10min ≦X < 60min(+8% ~-8%), X≧60min(+5%~-5%)

070824-1A

廣隆光電科技股份有限公司
KUNG LONG BATTERIES INDUSTRIAL CO., LTD.
Head Quarter Service TEL: +886-49-2254-777 FAX: +886-49-2255-139 E-mail: sales@mail.klb.com.tw
USA Customer Service TEL: +1-949-328-7936 FAX: +1-949-266-9917 E-mail: sales@kunglong.com
Vietnam Customer Service TEL: +84-272-3779666 FAX: +84-272-3779476 E-mail: sales@mail.klb.com.tw

Contents in this data sheet are subject to change for improvement without prior notice to users. For clarifications and updated information, please contact us.